CWI LIGHTING

BRIGHTER LIVING. SIMPLIFIED.

PROJECT: _____

FIXTURE TYPE: _____

LOCATION: _____

CONTACT/PHONE: _____

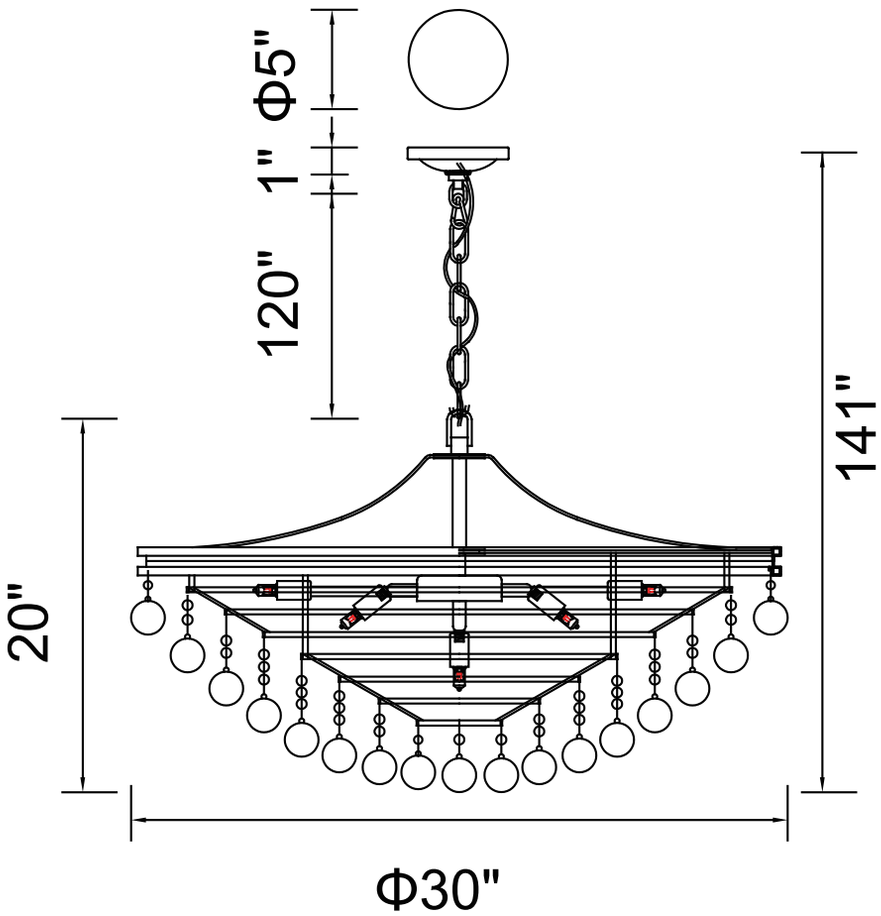

Item	1070P30-13-601
Collection	SERAPHINA
Finish	Chrome
Glass	------
Crystal	Clear
Input	120V AC,60HZ,AC

Shade	------
Length/Dia.	30"
Width/Ext.	------
Height	20"
Maximum	141"
Lumens	------

Light Source	G9
Bulb Info.	3×40W
Included	------
Dimmable	No
Color	------
Weight	34.5KG

CWI LIGHTING
www.cwilighting.com
Info@cwilighting.com

140 Steelcase Rd.W.
Markham ON. L3R 3J9 Canada
Tel: 905 940 4999
Toll: 1-877-564-6034
Fax:905-940-0126
Toll Fax: 1-866-840-2796

Dallas showroom
Dallas Market Center
Showroom #: 3353
2100N. Stemmons Frwy.
Dallas, TX 75207