Trade Mark:
CRYSTAL WORLD INC

Product Name: Pendant lamp
Model :5072P36C-RC
120Vac, 60Hz,AC ONLY
Lamp Size:L36"*W5"*59"H

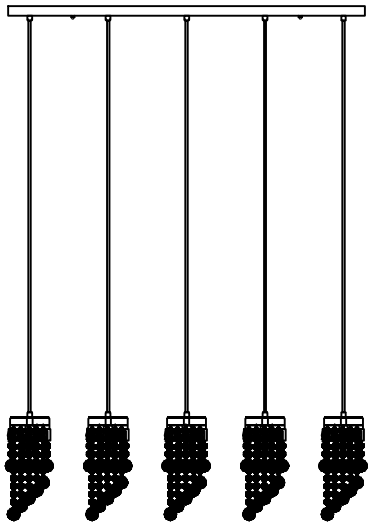

C US
Intertek
4006677

PENDANT LAMP ASSEMBLY INSTRUCTIONS

1.Place fixture(A)onto mounting screws (DD).secure with cap nuts（AA）.

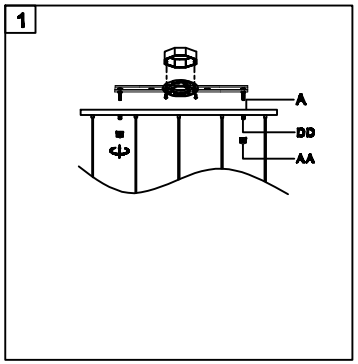

Hardware Used

AA Cap nut X 2

DD Mounting screw X 2

2.Please hang the crystal(1) (2) (3) (4) (5) (6) to the fixture .

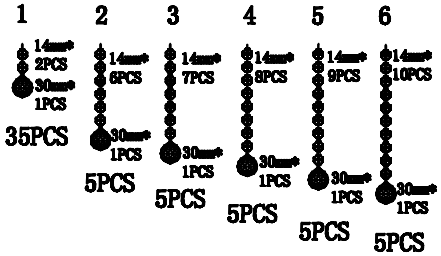

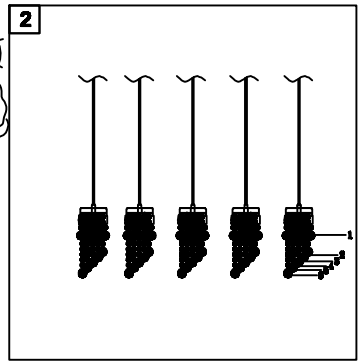
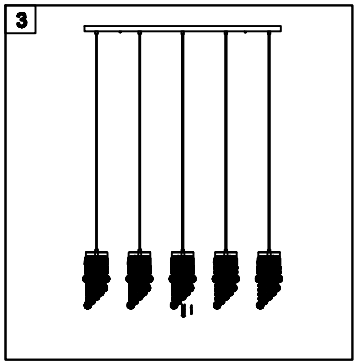
3.Install light bulbs (not included).
Use bulb
120V G9 5*40W Max.