Trade Mark:
CRYSTAL WORLD INC

Product Name: Ceiling lamp
Model :8040C14C
120Vac, 60Hz,AC ONLY
Lamp size:Ø14"XH8"

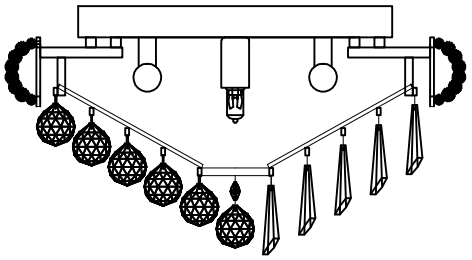

C US
Intertek
4006677

CEILING LAMP ASSEMBLY INSTRUCTIONS

1.Place fixture(A) onto mounting screws (DD).secure with cap nuts（AA）.

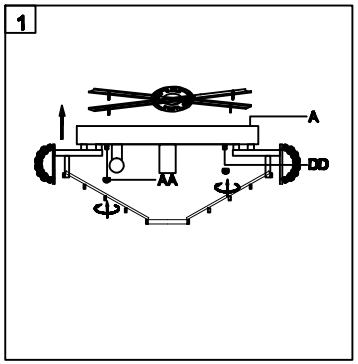

Hardware Used

AA Cap nut X 4

DD Mounting screw X 4

2.Please put the crystal (1) (2) (3) in the fixture .

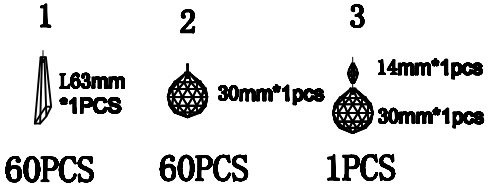

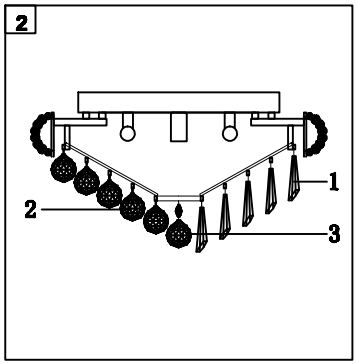
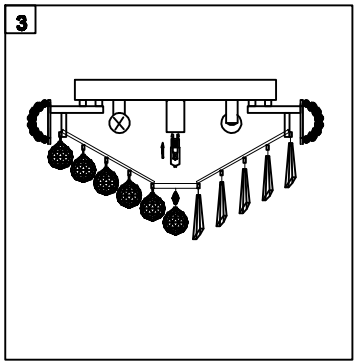
3.Install light bulbs (not included).
Use bulb
120V G9 **4*40W Max.**