Model :9965C14-3-601
120Vac, 60Hz,AC ONLY
Lamp Size:D14"*H10"
Product Name: Ceiling lamp

Trade Mark:
CRYSTAL WORLD INC

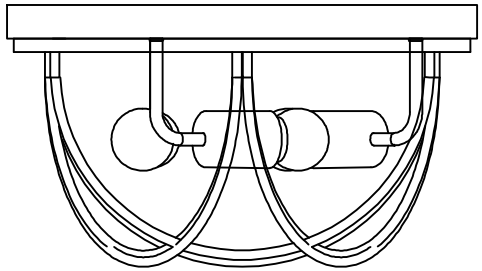

C US
Intertek
4006677

Ceiling LAMP ASSEMBLY INSTRUCTIONS

1.Place fixture(A)onto mounting screws (DD).secure with cap nuts（AA）.

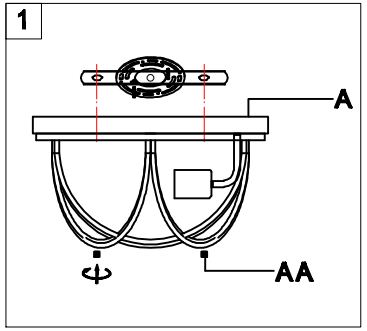

Hardware Used

AA Cap nut ▪ X 2
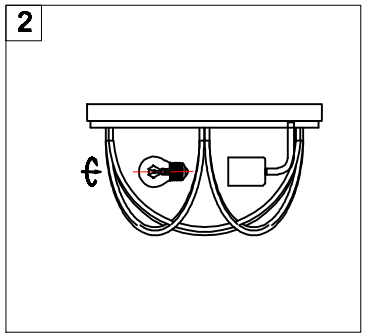
2.Install bulbs (NOT INCLUDED).
USE
120V E26 3*40W Max.